GRV180R5TAB TECHNIBEL CONDIZ.U.E.

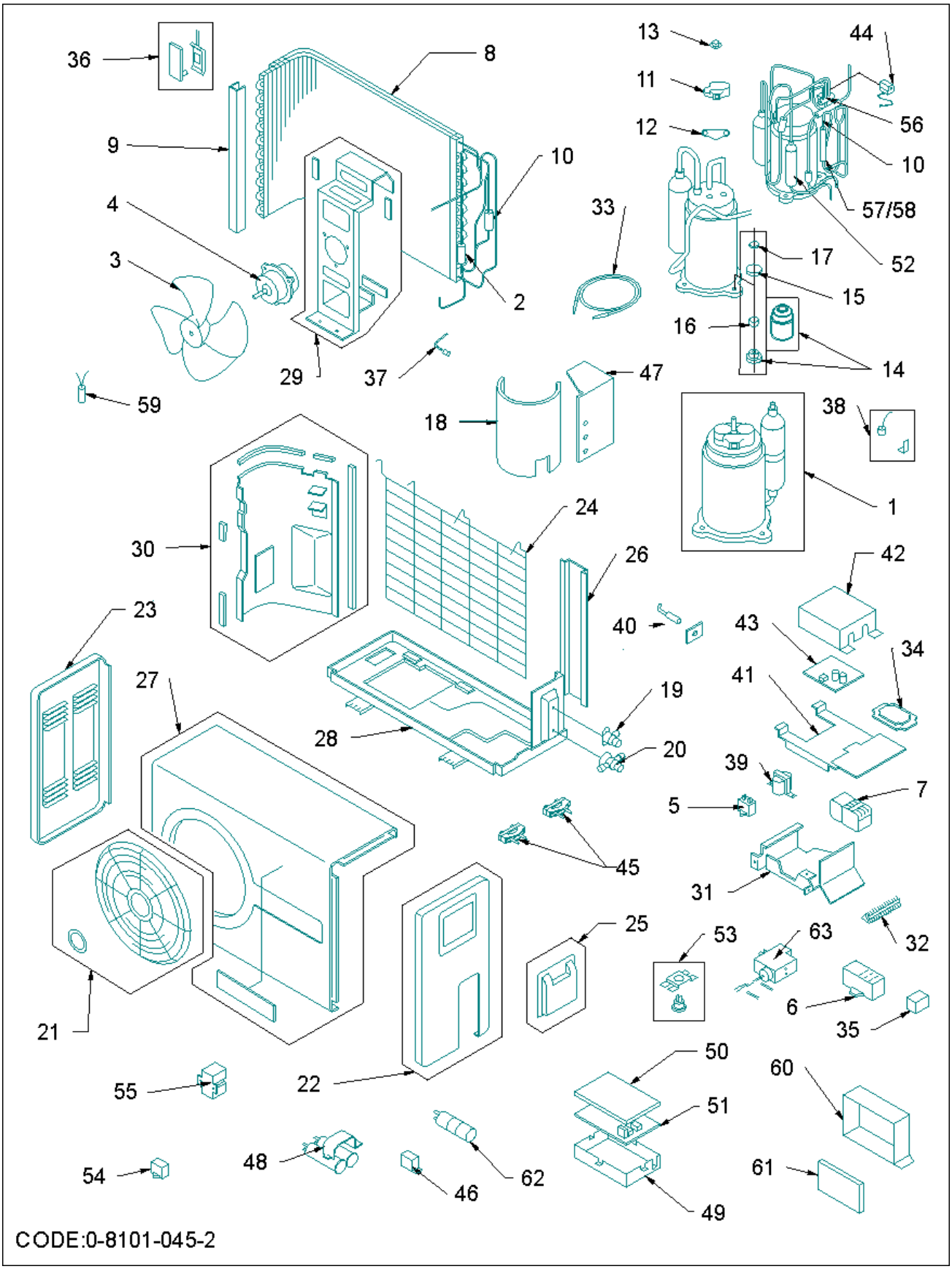

codice	modello	
387107072	GRV180R5TAB	11/03/08

	rif.	codice	descrizione	q.tà	inizio val.	fine val.	da matr.	a matr.

*	1	6750000441	ASS.COMPR.4JS350EAA(JSM671-048	1	25/02/03	31/12/9999		
*	3	6230418738	VENTILATORE ELICOIDALE	1	25/02/03	31/12/9999		
*	4	6230943094	MOTORE VENTILATORE 51-BSP	1	25/02/03	31/12/9999		
*	5	6230962583	CONDENSATORE 2UF/440V	1	25/02/03	31/12/9999		
	8	6760000343	ASS.BATTERIA AER518SHB R407C	1	25/02/03	31/12/9999		
	9	6231315081	ASS.TASSELLO POL.ESP.BATT.U.E.	1	25/02/03	31/12/9999		
	11	6750000442	COPERCHIO COMPR.7070231U	1	25/02/03	31/12/9999		
	12	6750000443	GUARNIZ.COP.COMP.7070632U	1	25/02/03	31/12/9999		
	13	6750000444	DADO COP.COMP.M5X0.8 7080300	1	25/02/03	31/12/9999		
	14	6750000445	GOMMINO COMP.(3PZ) 7070823	1	25/02/03	31/12/9999		
	18	6750000446	ISOL.COMP.270X760X7	1	25/02/03	31/12/9999		
	19	6231451574	GR.VALVOLA 1/4"-18MC	1	25/02/03	31/12/9999		
	20	6231391641	GR.VALVOLA 1/2 U.E.12/18 CAST.	1	25/02/03	31/12/9999		
	21	6231082938	GRIGLIA MANDATA UE NEUTRA	1	25/02/03	31/12/9999		
	22	6231423786	ASS.PANN.LAT.DX.U.E.16/18 CE	1	25/02/03	31/12/9999		
	23	6231313223	PANNELLO LAT.SX.U.E. 16/18	1	25/02/03	31/12/9999		
	24	6750000363	GRIGLIA PROTEZ. CNR188EH38	1	25/02/03	31/12/9999		
	25	6231423793	ASS.SPORT.MORS.U.E.DUCTED 12	1	25/02/03	31/12/9999		
	26	6231548007	PANNELLO POST.U.E.18HP.R407	1	25/02/03	31/12/9999		
	27	6750000003	ASS.PANN.ANT.C/BOCC.U.E.18 TE	1	25/02/03	31/12/9999		
	28	6760000345	ASS.BASAM.(P)NW-A54(AER518SHB/SH3B)	1	25/02/03	31/12/9999		
	29	6231385824	ASS.STAFFA MOTOVENTIL.U.E.16	1	25/02/03	31/12/9999		
	30	6231547994	ASS.DIVISORIO BATT/COMP C18 PIC.	1	25/02/03	31/12/9999		
	31	6750000435	QUADRO ELETT.(LAM.)C18	1	25/02/03	31/12/9999		
	32	6231422574	MORSETTIERA 10P U.E.7/18 HP	1	25/02/03	31/12/9999		
*	38	6231380539	TERMOS.TRS02-12MRS	1	25/02/03	31/12/9999		
*	44	6231483995	BOBINA SAGIN.L600 78EH/128H	1	25/02/03	31/12/9999		
	45	6231422567	FISSACAVO PA268/SQ	1	25/02/03	31/12/9999		
	47	6231482783	ISOL.VANO COMPR.260X710X7.5	1	25/02/03	31/12/9999		
*	54	6230024762	RELE DFU24D1-F(M)	1	25/02/03	31/12/9999		
*	56	6380125760	VALVOLA INVERSIONE	1	25/02/03	31/12/9999		
*	57	6760000344	GR.TUBI CAPILLARE (AER518SHB)	1	25/02/03	31/12/9999		
	60	6231369466	COPERCHIO SCHEDA U.E.HP S.6	1	25/02/03	31/12/9999		
*	61	6231380515	P.C.B.POW-C96GH	1	25/02/03	31/12/9999		
*	62	6703000029	CONDENSAT.45 UF 1.27.6 ARCOTR.	1	25/02/03	31/12/9999		
	998	08101045	ESPLOSO U.E.18	1	25/02/03	31/12/9999		
	999	6750000464	KIT IMBALLO GRV180R5TAB	1	25/02/03	31/12/9999		