SE09H STORM CONDIZ.U.E.

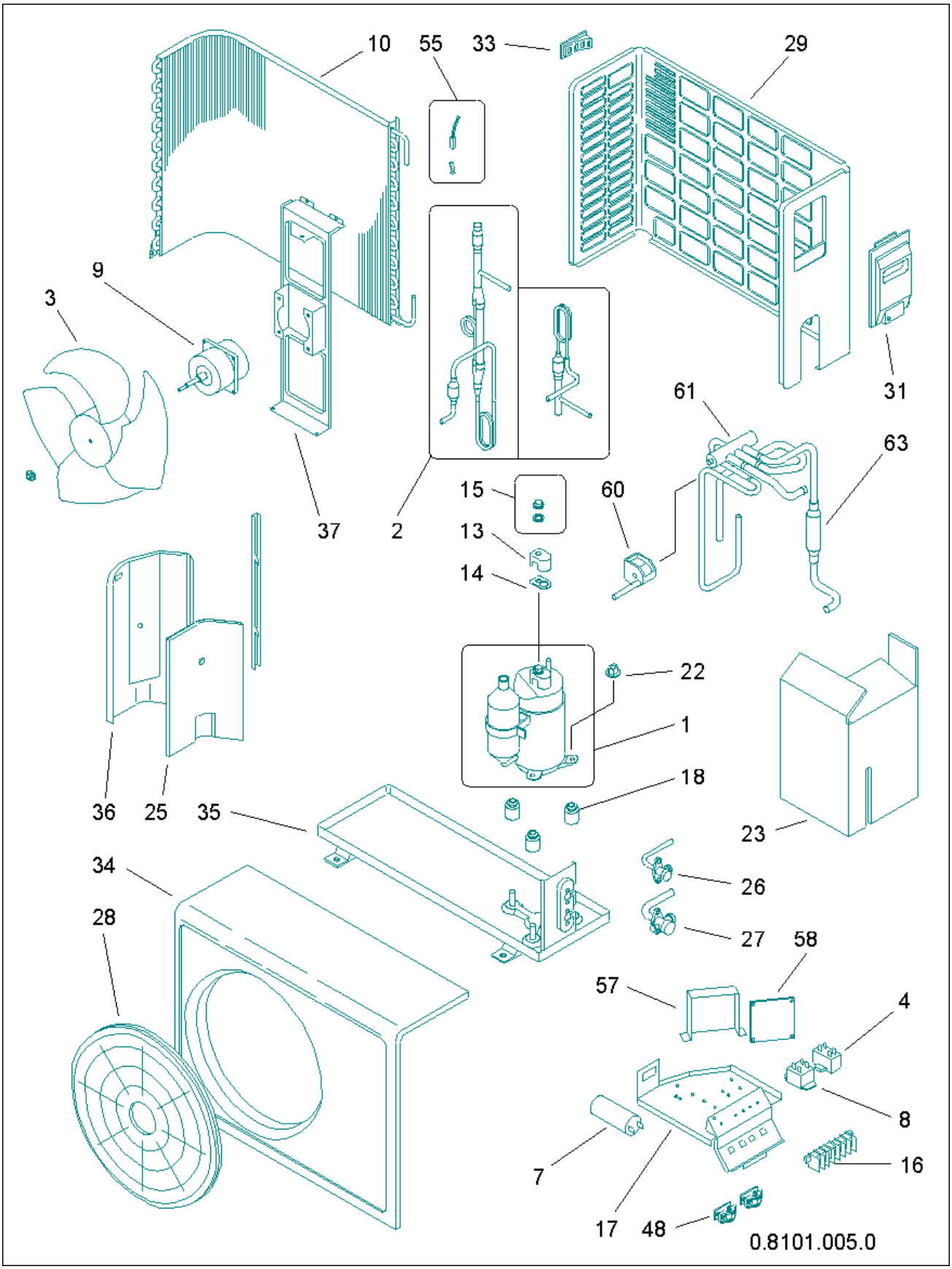

codice	modello	
387807004	SE09H	21/03/02

	rif.	codice	descrizione	q.tà	inizio val.	fine val.	da matr.	a matr.

*	1	6750000082	COMPRESS.RH154VHAT.R22.9MBH	1	26/04/00	31/12/9999		
*	2	6760000065	GR.TUBI CAPILLARE UE.J. 9HP	1	26/04/00	31/12/9999		
*	3	6231511681	GR.VENTOLA C7/12EA-H	1	26/04/00	31/12/9999		
*	4	6230011618	CONDENSATORE PMD-4415 1,5MFD	1	26/04/00	31/12/9999		
*	7	6705000006	CONDENSATORE 25MF MKP1.27.4	1	26/04/00	31/12/9999		
*	8	6230024762	RELE DFU24D1-F(M)	1	26/04/00	31/12/9999		
*	9	6231511933	MOTOVENTILATORE SISME MO1722	1	24/02/02	31/12/9999		
*	9	6231533416	MOTOVENTIL.SISME (S6231511933)	1	26/04/00	24/02/02		
	10	6760000067	ASS.BATTERIA UE.J.7/9HP	1	26/04/00	31/12/9999		
	13	6750000089	COPERCHIO COMPRESSORE	1	26/04/00	31/12/9999		
	14	6750000090	GUARNIZIONE COPERCHIO COMPRES.	1	26/04/00	31/12/9999		
	15	6750000131	DADO COPERCHIO COMPRESS.	1	26/04/00	31/12/9999		
	16	6231382915	MORSETTIERA 7P SC MONOFASE	1	21/07/08	31/12/9999		
	16	6706000001	MORSETTIERA 7P	1	26/04/00	21/07/08		
	17	6231511964	QUADRO ELETTR.LAM.C7/12EA	1	26/04/00	31/12/9999		
	18	6720000590	ANTIVIBR.COMPR.(VCS01D211)	1	26/04/00	31/12/9999		
	22	6230296497	DADO C/BORDO	1	26/04/00	31/12/9999		
	23	6231533324	ISOLANTE COMPRES.600X490X7	1	26/04/00	23/03/12		
	23	6760000772	ISOL.VANO COMP. 600X490X7	1	23/03/12	31/12/9999		
	25	6231533317	ISOLANTE DIV.COMPR.405X223X7	1	26/04/00	31/12/9999		
	26	6750000092	GR.VALVOLA 1/4 FUJINE SANGYO	1	26/04/00	31/12/9999		
	27	6750000093	GR.VALVOLA 3/8 FUJINE SANGYO	1	26/04/00	31/12/9999		
	28	6231082938	GRIGLIA MANDATA UE NEUTRA	1	26/04/00	31/12/9999		
	29	6231511643	ASS.PANNELLO POST.C7/12EA-H	1	26/04/00	31/12/9999		
	31	6231511629	ASS.SPORT.MORS.C7/12EA-H	1	26/04/00	31/12/9999		
	33	6230503526	MANIGLIA PANN.LAT.SX.U.E.	1	26/04/00	31/12/9999		
	34	6750000167	ASS.PANN.ANT.C/BOCC.STORM	1	26/04/00	31/12/9999		
	35	6231511971	ASS.BASAMENTO C7/12EHA-9/12EA	1	26/04/00	31/12/9999		
	36	6231511988	ASS.DIVISO.BATT/COMP.C7/12EA-H	1	26/04/00	31/12/9999		
	37	6231533294	ASS.STAFFA MOTOVENTIL.	1	26/04/00	31/12/9999		
	48	6231422567	FISSACAVO PA268/SQ	1	26/04/00	31/12/9999		
*	55	6231380539	TERMOS.TRS02-12MRS	1	26/04/00	31/12/9999		
	57	6231369466	COPERCHIO SCHEDA U.E.HP S.6	1	26/04/00	31/12/9999		
*	58	6231380515	P.C.B.POW-C96GH	1	26/04/00	31/12/9999		
*	60	6231483995	BOBINA SAGIN.L600 78EH/128H	1	26/04/00	10/02/05		
*	60	6706000028	BOBINA ELETTROM.SQ-136 SANHUA	1	10/02/05	31/12/9999		
*	61	6230436190	VALVOLA A SOLENOIDE	1	26/04/00	31/12/9999		
	63	6760000087	MUFFOLA	1	26/04/00	31/12/9999		
	998	08101005	ESPLOSO U.E.C7/12J(TONDA)	1	26/04/00	31/12/9999		
	999	6760000130	KIT IMBALLO SE09H	1	26/04/00	31/12/9999		